LATHEM TIME
3-WIRE 'ISC' IMPULSE CLOCK WIRING
USING ASQMSTR-00X8E MASTER CLOCK
PS8-24-ALT POWER SUPPLY
PS8-24B3-ALT BOOSTERS
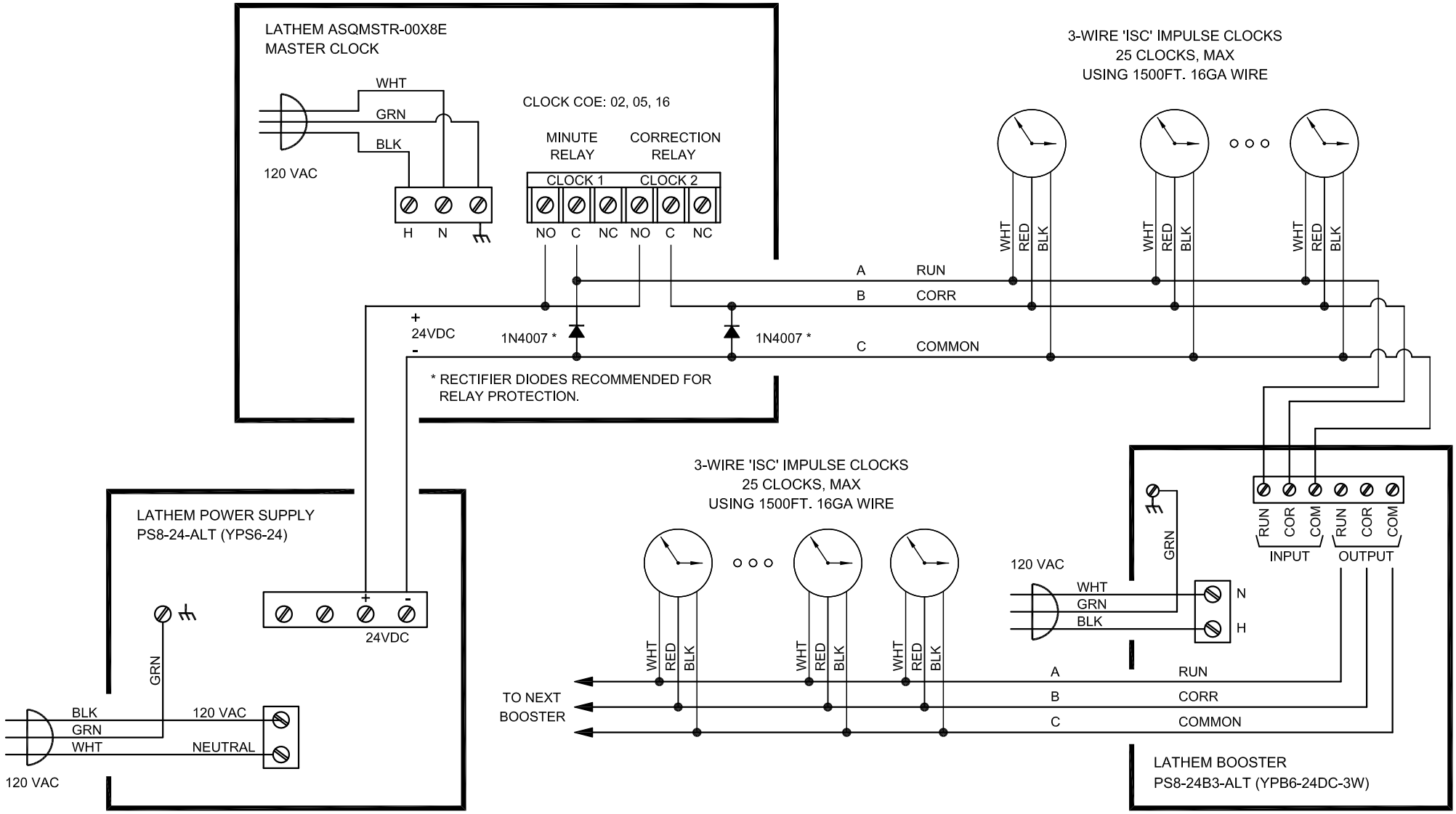
CLOCK CODE 02 - 3 WIRE MINUTE IMPULSE
CLOCK CODE 05 - 3 WIRE MINUTE IMPULSE (58TH MINUTE)
CLOCK CODE 16 - 3 WIRE MINUTE IMPULSE (59TH MINUTE) WITH 12HR CORRECTION